L'Essor Français Electronique

PST123

Miniature Pressure Sensor

Features

- Available with 0,5-4,5Vdc output
- Miniature pressure sensor
- Operating from -40 to +125°C
- Available with connector or cable

Applications

- Energy / Nuclear
- Machine construction
- Medical instruments
- Automation & Robotics

The PST120 series is a miniature pressure sensor. Operating from –40 up to +125°C, three compensated temperature ranges are available to best suit your application's environment. Its wetted parts being all titanium, it is compatible with most media, including corrosive fluids used in automotive and aerospace industries. High performances and stability over temperature are achieved thanks to EFE proprietary sensing technologies. The robust and proven design of the sensor ensures reliability in your application. The PST120 series is available with unamplified (mV/V) and amplified voltage output (0,5-4,5Vdc), integrating a high performance and ruggedized electronic module.

Technical specifications

Pressure ranges (FS)	-1/+4bar ; -1/+9bar ; 3bar ; 5bar ; 10bar ; 20bar ; 40bar ; 100bar ; 250bar ; 400bar ; -14.5/+60PSI ; -14.5/+140PSI ; 40PSI ; 70PSI ; 150PSI ; 300PSI ; 500PSI ; 1500PSI ; 3000PSI ; 5000PSI
Type	Absolute ; Gage
Type (for ranges > 40 bar)	Sealed Gage
Safe overload	150% FS
Burst pressure	300% FS
Power supply	5Vdc ± 10mV
Consumption	< 10mA
Insulation	> 1000 MOhms under 50Vdc at ambient temperature
Output at -100%FS (only for ± range)	0.5Vdc
Output at 0%FS (except ranges ±)	0.5Vdc
Output at 100%FS	4.5Vdc
Zero and sensitivity settings tolerances	±50mV

Technical Specifications

Non linearity and hysteresis combined	±0.25% FS Option : ±0.1% FS
Non repeatability	±0.02% FS typ.
Signal bandwidth	1000Hz @ -3dB Option : Special Adjustment up to 3000Hz @ -3dB
Compensated temperature range	0 to +60°C Option : -25 to +85°C ; -25 to +125°C
Operating temperature range	-40 to +125°C
Combined thermal zero & sensitivity shifts	±0.02% FS/°C
Constant acceleration in linear vibrations	± 0.02% FS/g (frequency 20-2000Hz, 50g max.)
Mechanical shock	100g ½ sinus 1ms
Electrical protection	Protected against polarity inversion
EMC protection	Compliant to EN61000
Electrical connection	AWG26, Viton Jacketed Shielded Cable Ø3mm, 4 wires Option : Microtech Hermetic Receptable DR-4S-4H, 4 pins (stainles steel)
Mechanical connection	M10x1-4h male ; M5x0.8-6g male Option : M8x1-6g male
Material(s) of wetted parts	Stainless Steel 316L ; Stainless Steel 17-4PH ; Stainless steel 15-5PH
Weight	10g without cable
Enclosure protection	IP65 for absolute & sealed gage version

Codification

Miniature Pressure Sensor	PST12	3	S	10bar	A	02	08/1m	A	1	1	B	
Output Signal												
0.5-4.5Vdc regulated power supply		3										
Material												
Stainless Steels			S									
Range												
Example				10bar								
Type												
Absolute					A							
Gage					G							
Sealed Gage					SG							
Mechanical connection												
M10x1-4h male						02						
M8x1-6g male						03						
M5x0.8-6g male						05						
Electrical connection												
AWG26, Viton Jacketed Shielded Cable Ø3mm, 4 wires							08/1m					
Microtech Hermetic Receptable DR-4S-4H, 4 pins (stainles steel)							22					
Compensated temperature range												
0 to +60°C								A				
-25 to +85°C								B				
-25 to +125°C								C				
Non linearity and hysteresis combined												
±0.25% FS									1			
±0.1% FS									2			
Combined thermal zero & sensitivity shifts												
±0.02% FS/°C										1		
Options												
Special Adjustment up to 3000Hz @ -3dB											B	

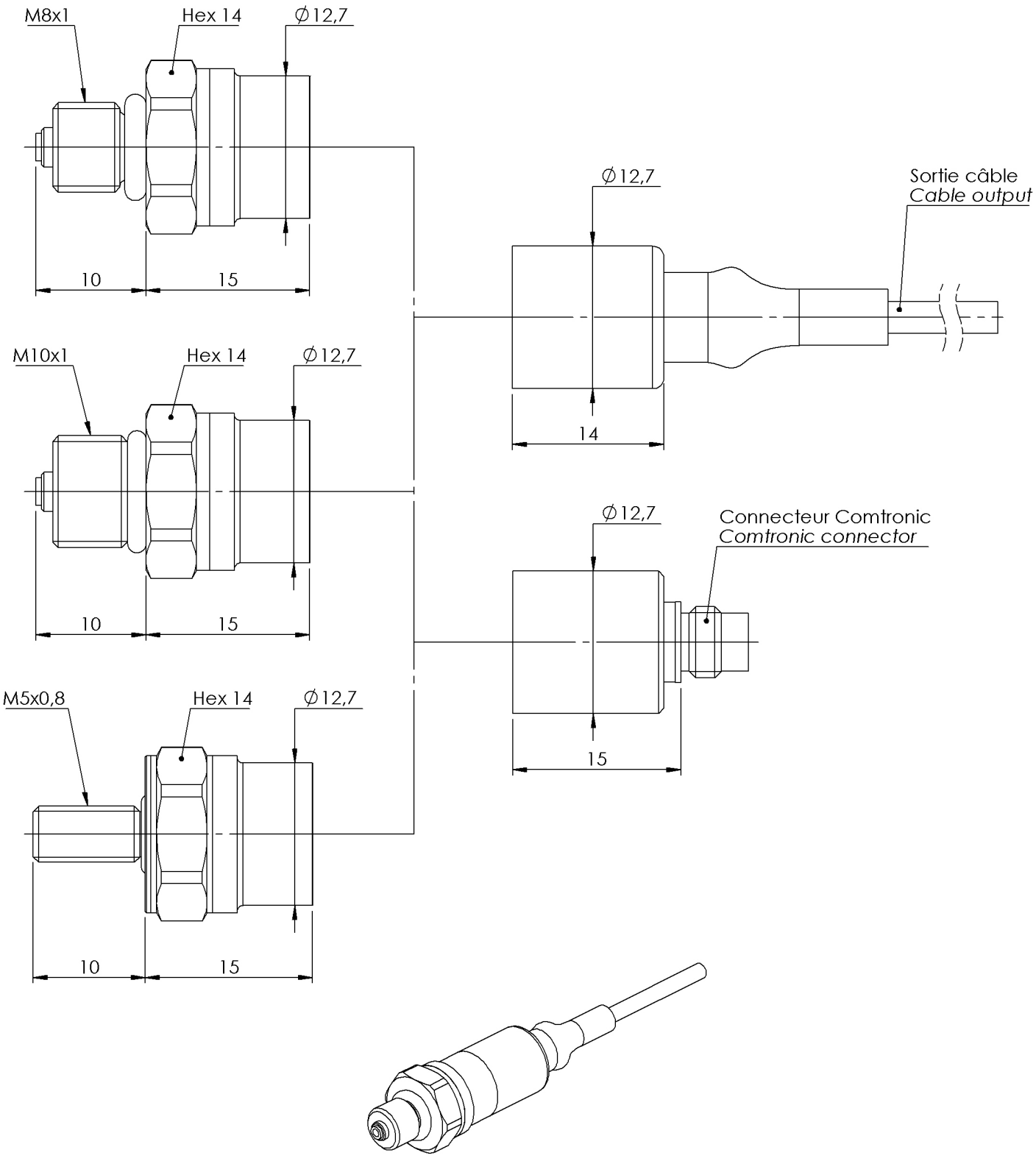

Dimensions : mm

#26 AWG, 4 CONDUCTOR SHIELDED VITON CABLE	
VOLTAGE OUTPUT	**CONDUCTOR**
+ EXCITATION	RED
+ SIGNAL	GREEN / YELLOW
NC	WHITE
0 VOLT	BLUE / BLACK
SENSOR HOUSING	SHIELD

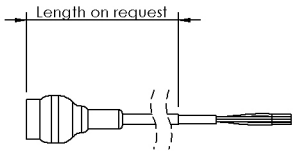

MICROTECH DR-4S-4H - 4 PINS	
VOLTAGE OUTPUT	**PIN**
+ EXCITATION	PIN 1
NC	PIN 4
0 VOLT	PIN 2
+ SIGNAL	PIN 3
SENSOR HOUSING	CONNECTOR HOUSING

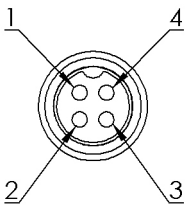

Agent :

E.F.E.
L'ESSOR FRANCAIS ELECTRONIQUE
16 Rue Porte a Bateaux - 27540 Ivry-la-Bataille - FRANCE
Tel : 33 (0)2 32 22 35 05 - Fax : 33 (0)2 32 36 93 08
www.efe-sensor.com - infos@efe-sensor.com